T-162A CAVITY DETAILS

(ALL DIMENSIONS IN MILLIMETERS)
△M16 x 1.5-6H ISO (METRIC) THREAD
15,216/15,026 PITCH DIA.

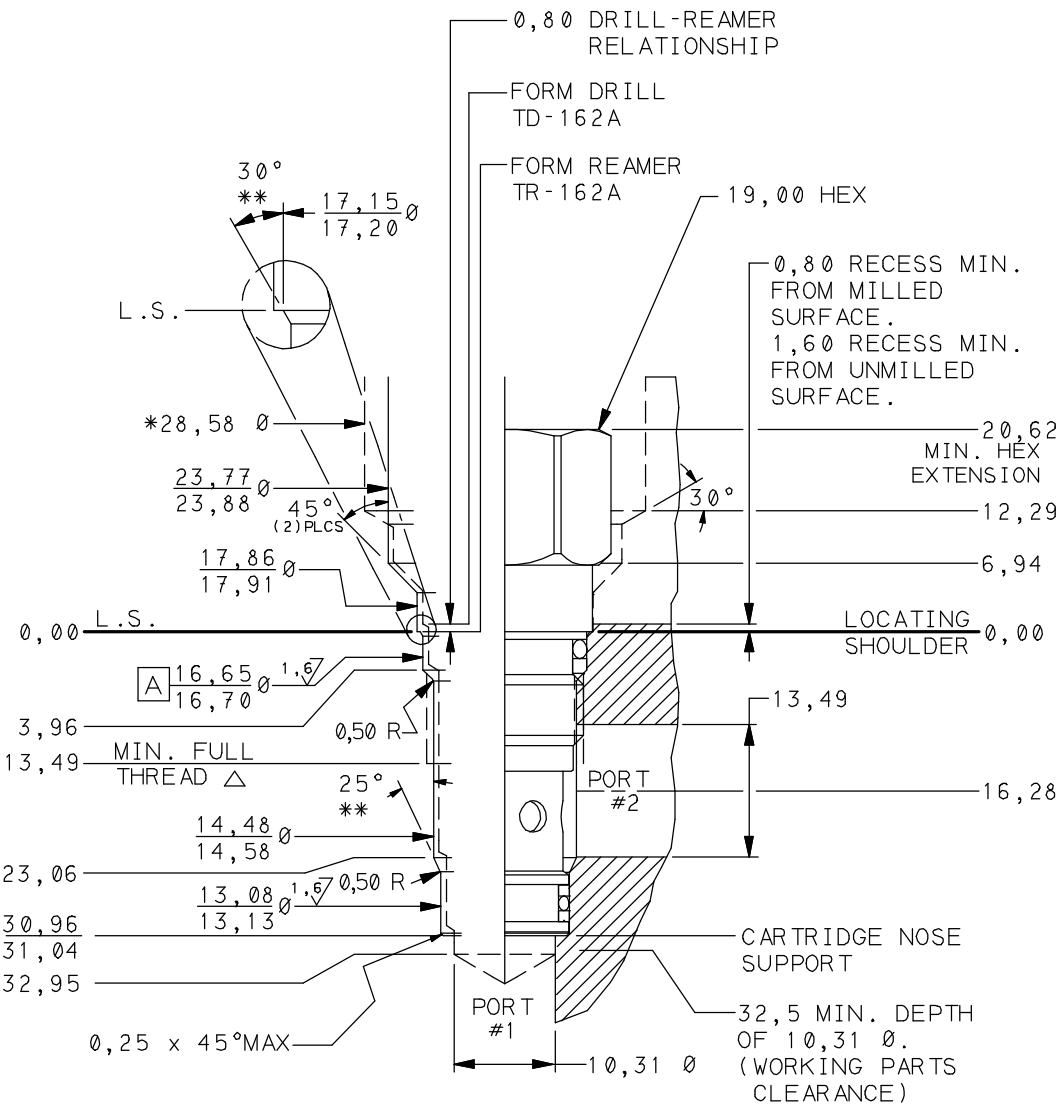

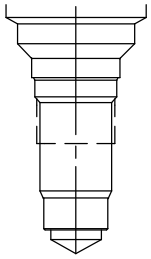

FULL SCALE

⊙ 0,05 A THREAD AND ALL DIAMETERS

*SOCKET WRENCH CLEARANCE DIA= 28,58
(TD-162A MAJOR DIA.)
MINIMUM C/L TO EDGE DISTANCE= 11,51
MINIMUM C/L TO C/L=
POINT CLEARANCE: 22,23
SOCKET CLEARANCE: 24,61
NBOM CALLOUT: SUN STD T-162A CAVITY
NBOM CODE: T162A

**ALL O-RING "LEAD IN's" TO BE SMOOTH AND FREE OF NICKS AND SHARP EDGES.

PROPRIETARY NOTICE
THIS DRAWING DESCRIBES A PROPRIETARY PRODUCT OF SUN HYDRAULICS CORPORATION AND MAY NOT BE REPRODUCED OR GIVEN TO A THIRD PARTY WITHOUT WRITTEN PERMISSION FROM SUN HYDRAULICS CORPORATION
© SUN HYDRAULICS CORPORATION

LET	REVISION	DATE	DRN	CHK	REL
A	ADDED METRIC DRAWING	22AUG96	RJB		7500
B	REVISED TO BE CONSISTENT W/ CAVITIES W/ SIMILIAR DIMENSIONS	21JAN98	RJB		8372
C	DIM 16,65/16,70 WAS 16,66/16,69	31MAR99	DSS		
---	TOLERANCE CORRECTIONS ON METRIC DWG	05AUG99	DAS		

UNLESS OTHERWISE SPECIFIED DIM. TOLERANCE +/- 0,13 mm UNLESS SPECIFIED
ANGLE TOL ± ½° FINISH 2µ UNLESS SPECIFIED REMOVE ALL BURRS

TITLE: T-162A CAVITY DIMENSIONS, TOOLING, PORTING
SCALE REF.: 2:1 SERIES ZERO
MATERIAL
HEAT TREAT & FINISH

DRAWN	DATE	CHECK	DATE	RELEASE	DATE
RJB	14MAR94	DAS	14MAR94		

REVISION: C
PART NO.: T-162A METRIC
SHEET 2 of 2

sun hydraulics CORPORATION
1500 WEST UNIVERSITY PKWY
SARASOTA, FLORIDA 34243, USA
TELEPHONE (941) 355-2383

REVISION: C
PART NO.: T-162A METRIC
SHEET 2 of 2